LOCAL CONNECTION FOR EM 24V PANEL TO 24V PM SPRING RETURN ACTUATOR FOR A SINGLE DAMPER

A brand of MAICO

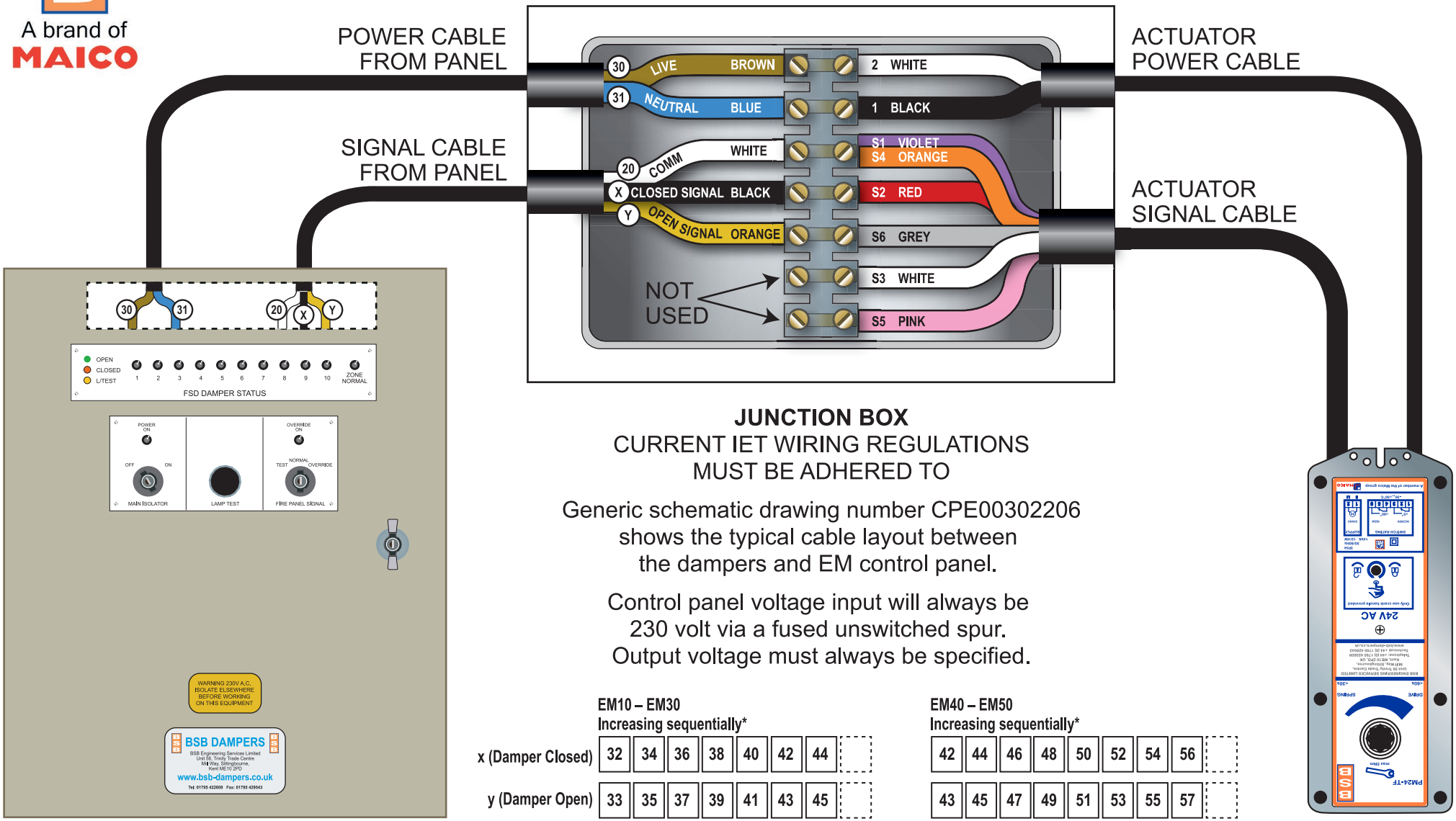

JUNCTION BOX
CURRENT IET WIRING REGULATIONS MUST BE ADHERED TO

Generic schematic drawing number CPE00302206 shows the typical cable layout between the dampers and EM control panel.

Control panel voltage input will always be 230 volt via a fused unswitched spur. Output voltage must always be specified.

	EM10 – EM30 Increasing sequentially*							
x (Damper Closed)	32	34	36	38	40	42	44	
y (Damper Open)	33	35	37	39	41	43	45	

	EM40 – EM50 Increasing sequentially*							
x (Damper Closed)	42	44	46	48	50	52	54	56
y (Damper Open)	43	45	47	49	51	53	55	57

* Refer to panel wiring diagrams as groups of sequential numbers are omitted on EM30, EM40 and EM50

Drawing No. CPE00292208

© The content of this drawing may not be reproduced in whole or in part without the express written permission of BSB Engineering Services Ltd.